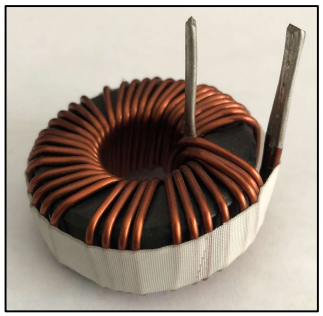

DIMENSIONAL TOLERANCES INCHES [MM]				
A MAX	B MAX	C MIN	D REF	X REF
2.20 [56.00]	1.18 [30.00]	1.00 [25.40]	0.065x0.26 [1.65x6.60]	0.73 [18.50]

REVISION HISTORY						
REV	ECN	DESCRIPTION	SIGN & DATE			
			BY	DATE	CHK	DATE
A1	—	UPDATED SPECS.	JZ	08/17/2020	JL	08/17/2020
B	—	FIXED D DIM AND REVISED PCB MOUNTING HOLE SIZE	TN	12/16/22	JL	12/16/22

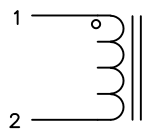

SCHEMATIC

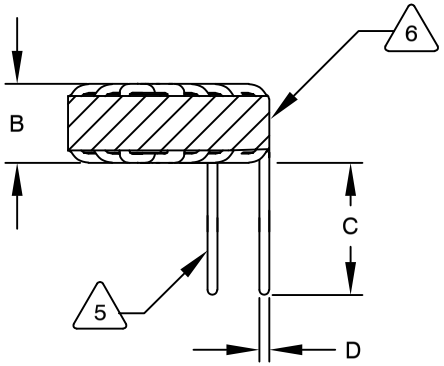

FRONT VIEW

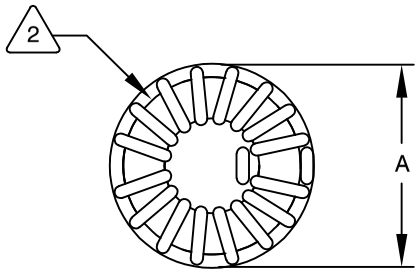

BOTTOM VIEW

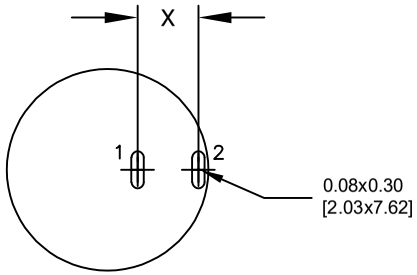

MOUNTING HOLES PATTERN

DC BIAS TABLE

DC BIAS (AMP)	L @ 1.0 KHz
0	33.0uH
5	30.3uH
10	27.9uH
15	25.3uH
20	22.7uH
25	20.4uH
30	18.2uH
35	16.0uH
40	14.3uH
45	12.5uH
50	11.2uH
55	9.9uH
60	9.0uH
65	8.1uH
70	7.3uH

7 BUILD TO RoHS COMPLIANCE AND LEAD FREE.

USING A PERMANENT MARKING METHOD
MARK PART NUMBER AND REVISION, IF APPLICABLE

6 WRAP INDUCTOR WITH 3M # 79 OR EQUAL

5 (I.E. COIL MUST REST FLAT ON PCB). LEADS MUST BE TANGENT TO THE CORE
REMOVE INSULATION AND TIN LEADS 1.00 INCH, FLUSH WITH THE COIL EDGE, AS SHOWN

WIND COILS EVENLY SPACED AROUND THE CORE

4 CONSTRUCTION:

THESE SPECIFICATIONS ARE BASED ON LOW RIPPLE CURRENT
WEIGHT: 260 GRAMS TYPICAL
INTERWINDING CAPACITANCE = 12 pF TYP @ SRF
SRF = 8.5 MHz TYPICAL
|Z| = 4.3 KILO-OHMS TYP @ SRF
RECOMMENDED AMBIENT OPERATING TEMP: -40 °C TO 200°C
HI-POT TEST FOR WINDING TO CORE ISOLATION = 500 VDC 10 SEC
CURRENT RATING : 70 AMPS, 40 °C TEMP. RISE WITH SOME AIR FLOW
DCR = 2 MILLI-OHMS MAX.
INDUCTOR DC BIAS: SEE TABLE ON THE RIGHT
INDUCTANCE = 33 uH±15% @ 0 AMP DC BIAS, 1.0 KHz, 300mV

3 SPECIFICATIONS @ 25°C :

2 WIRE: UL RECOGNIZED 200°C RATED MAGNET WIRE
CORE: POWDERED TOROIDAL CORE, CWS BYTEMARK OR OTHER APPROVED PART

1 MATERIAL: UL RECOGNIZED 94V-0 FOR FLAMMABILITY, RATING CLASS H (180°C MIN.) REQUIRED

ANY TOLERANCE. THIS DIM. CAN VARY A LITTLE FROM PART TO PART.
"TYP" IN DIM. TOL. TABLE REFERS TO A NON-CRITICAL TYPICAL (AVERAGE) DIM. WITHOUT
NOTES: UNLESS OTHERWISE STATED, READ NOTES FROM BOTTOM UP.
CAGE CODE: 5DME2

CODE IDENT	MFG. P/N	DESCRIPTION	ITEM NO.

PARTS LIST

AUTOCAD	X	
SOLIDWORKS		
SIGN		DATE
DRAWN	JL	11/18/2017
CHECKED	JLAU	11/18/2017
ENGR.	JLAU	11/18/2017
APPR.	JLAU	11/18/2017

UNLESS OTHERWISE SPECIFIED
DIMENSIONING AND TOLERANCE PER ANSI Y14.5M
ALL DIMENSIONS ARE IN INCHES AND [MILIMETERS].
TOLERANCE INCHES: .XXX=±.005 .XX=±.015 ∠=±0°30'
TOLERANCE METRICS: .XXX=±.127 .XX=±.38 ∠=±0°30'
ANGLE PROJECTION
DO NOT SCALE DRAWING

COILWS COM, INC
www.coilws.com

CWS Coil Winding Specialist.
353 W Grove Ave
Orange, CA. 92865

TITLE: TOROIDAL POWER INDUCTOR
33 uH, 70 Amps, Horizontal

SIZE B | DWG. NO. SN467-330M-70AH | REV B

SCALE 2=1 | SHEET 1 OF 1

EP FORM0005 REV 3 10/01

CAD-FILE: